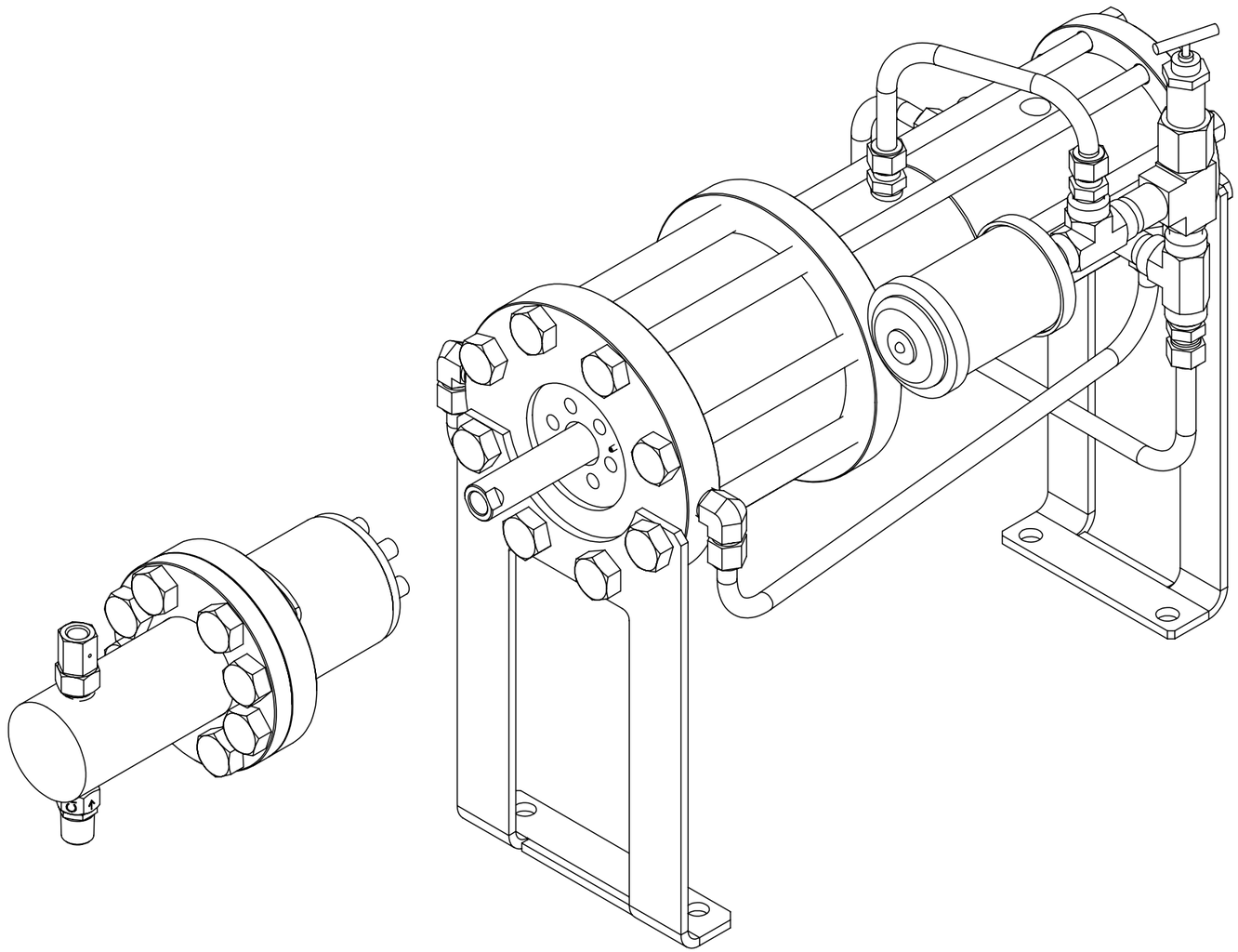

DATE	APPROVED
MAR-07-25	JF

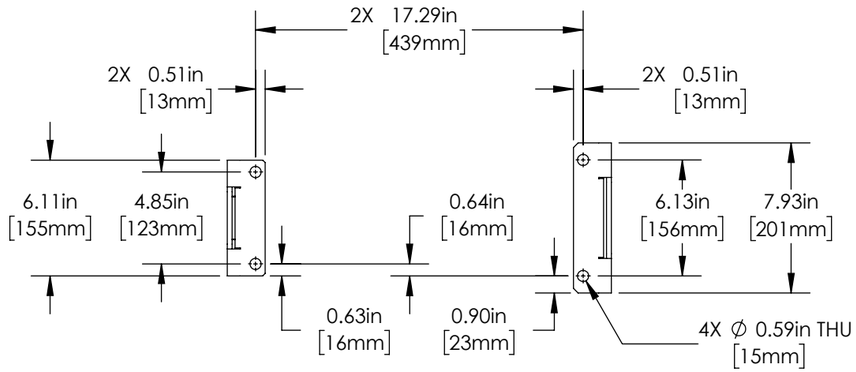

BOTTOM VIEW

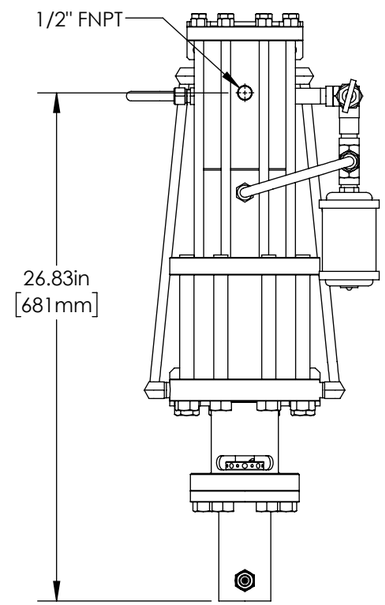

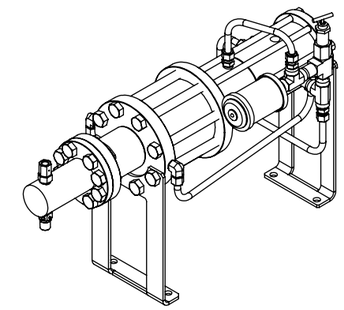

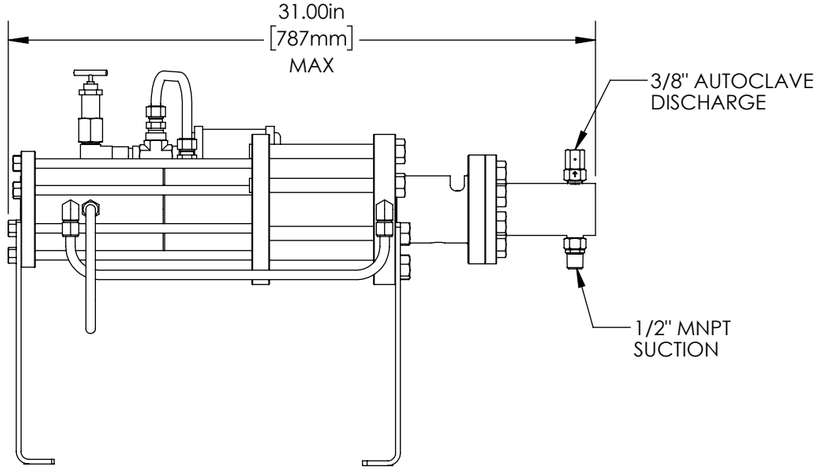

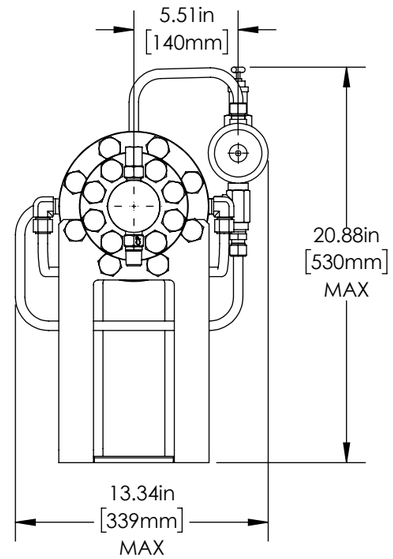

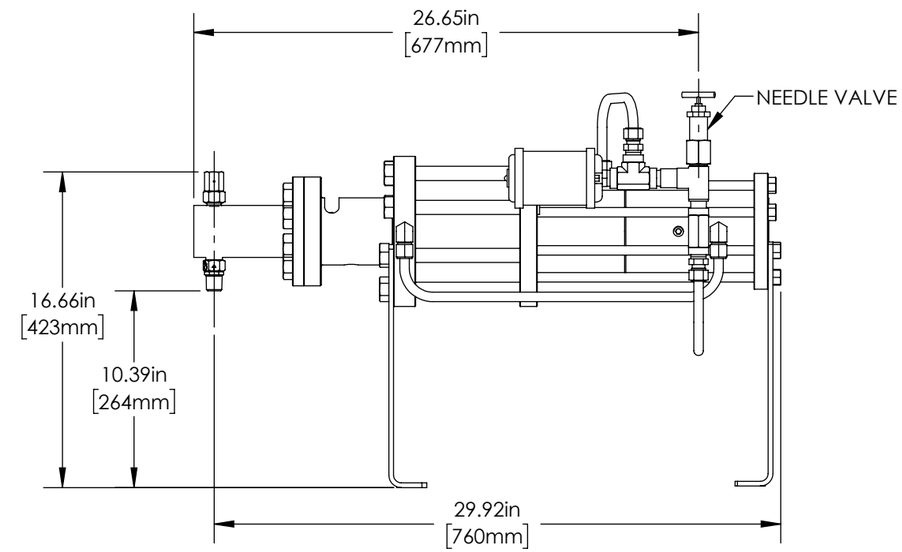

MARKETING DRAWING

WEIGHT	148 lb / 67.13 kg

PROPRIETARY AND CONFIDENTIAL

THE INFORMATION CONTAINED HEREIN IS PROPRIETARY TO CHECKPOINT SYSTEMS AND SHALL NOT BE REPRODUCED OR DISCLOSED IN WHOLE OR IN PART OR USED FOR ANY PUPOSE EXCEPT WHEN SUCH USER POSSESSES DIRECT WRITTEN AUTHORIZATION FROM CHECKPOINT SYSTEMS

CHECKPOINT PUMPS & SYSTEMS
21356 MARION LANE
MANDEVILLE, LA 70471 USA
TEL 504.340.0770 -- FAX 888.217.6402

CheckPoint
Pumps & Systems

DWG. TITLE
P5400 ASSEMBLY -1/2"
TOP LEVEL ASSEMBLY

REV	DRAWING NUMBER	SIZE
001	P5408C6Q3	B

SHEET 1 OF 2

P5408C6H3 - CERAMIC - HNBR

ITEM NO.	NUMBER	DESCRIPTION
1	P54MSA1	MOTOR SUB-ASSY
2	W58D308CNHPN3H6	W58 WET END ASSY

P5408C6Q3 - CERAMIC - FKM

ITEM NO.	NUMBER	DESCRIPTION
1	P54MSA1	MOTOR SUB-ASSY
2	W58D308CNQPN3Q6	W58 WET END ASSY

P5408C6F3 - CERAMIC - FFKM

ITEM NO.	NUMBER	DESCRIPTION
1	P54MSA1	MOTOR SUB-ASSY
2	W58D308CNFPN3F6	W58 WET END ASSY

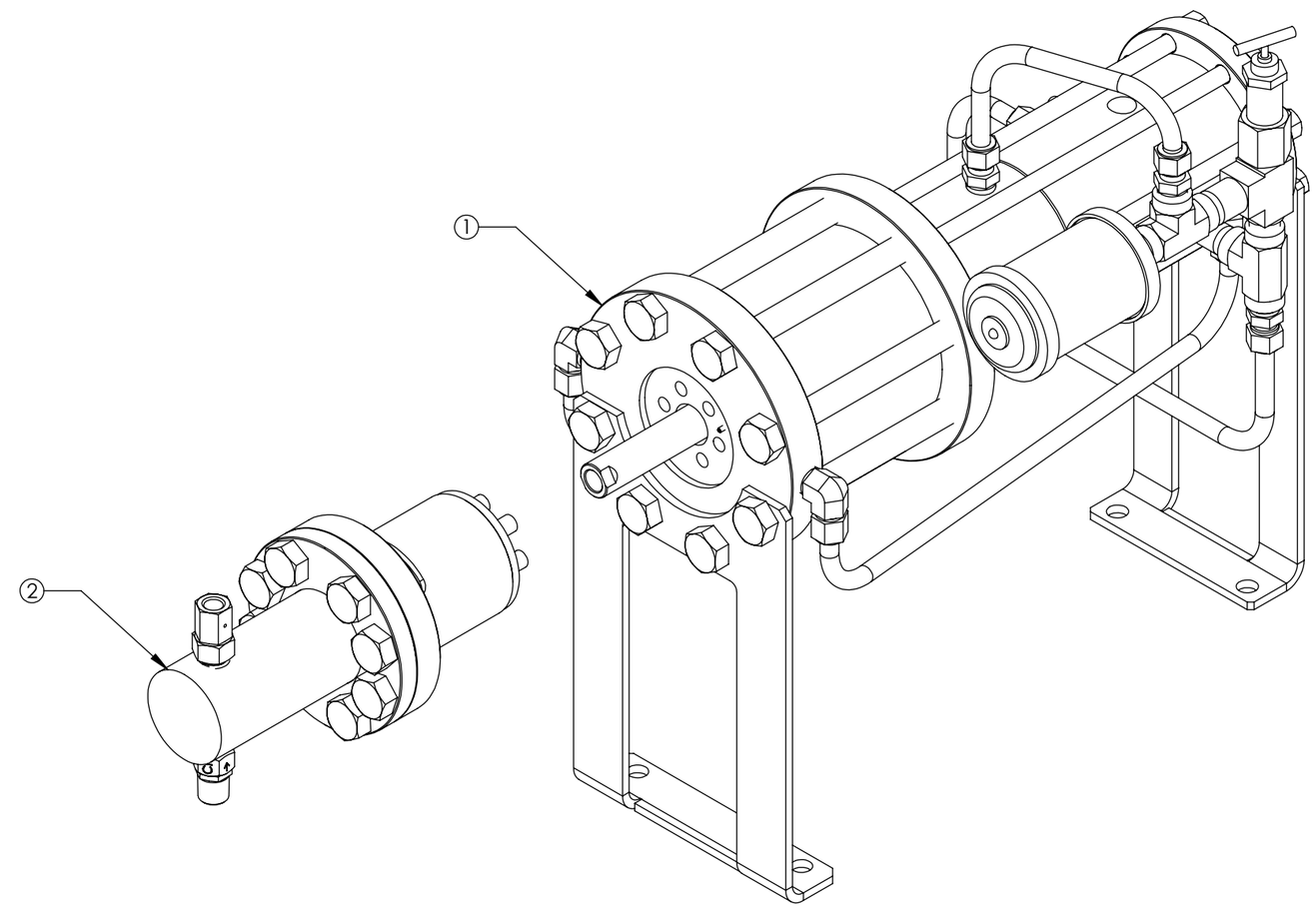

NOTE: SERIAL NUMBER PLATE / ATTACH SCREWS NOT SHOWN

MARKETING DRAWING

PROPRIETARY AND CONFIDENTIAL
THE INFORMATION CONTAINED HEREIN IS PROPRIETARY TO CHECKPOINT SYSTEMS AND SHALL NOT BE REPRODUCED OR DISCLOSED IN WHOLE OR IN PART OR USED FOR ANY PUPOSE EXCEPT WHEN SUCH USER POSSESSES DIRECT WRITTEN AUTHORIZATION FROM CHECKPOINT SYSTEMS

CHECKPOINT PUMPS & SYSTEMS
21356 MARION LANE
MANDEVILLE, LA 70471 USA
TEL 504.340.0770 -- FAX 888.217.6402

CheckPoint
Pumps & Systems

DWG. TITLE
P5400 ASSEMBLY -1/2"
TOP LEVEL ASSEMBLY

REV	DRAWING NUMBER	SIZE
001	P5408C6Q3	B

SHEET 2 OF 2

DATE	APPROVED
MAR-07-25	JF

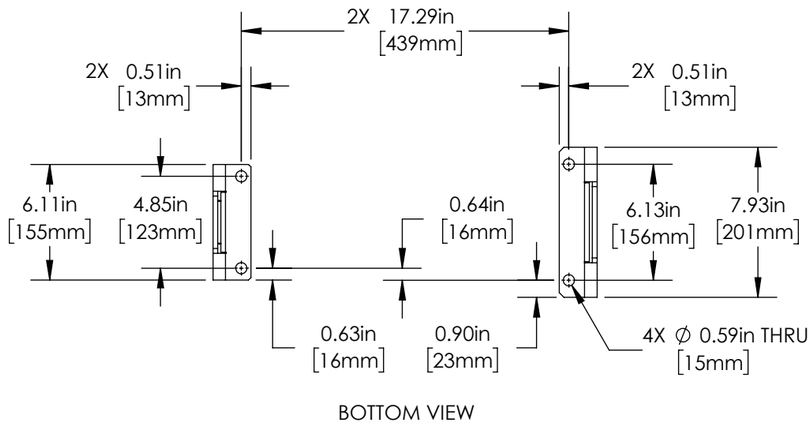

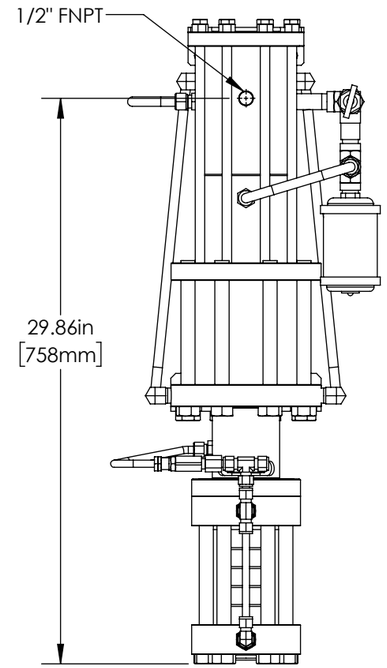

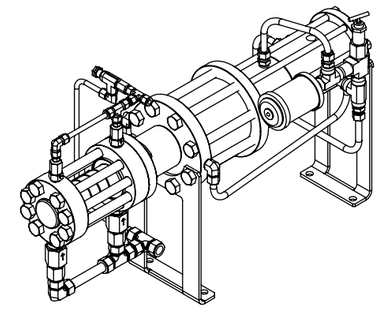

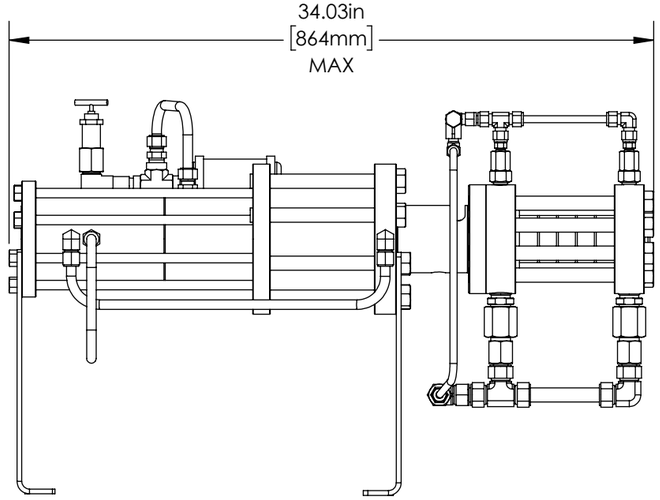

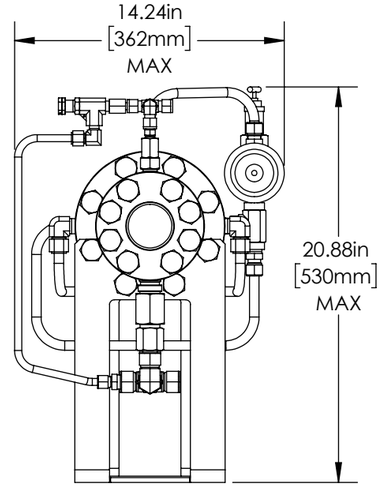

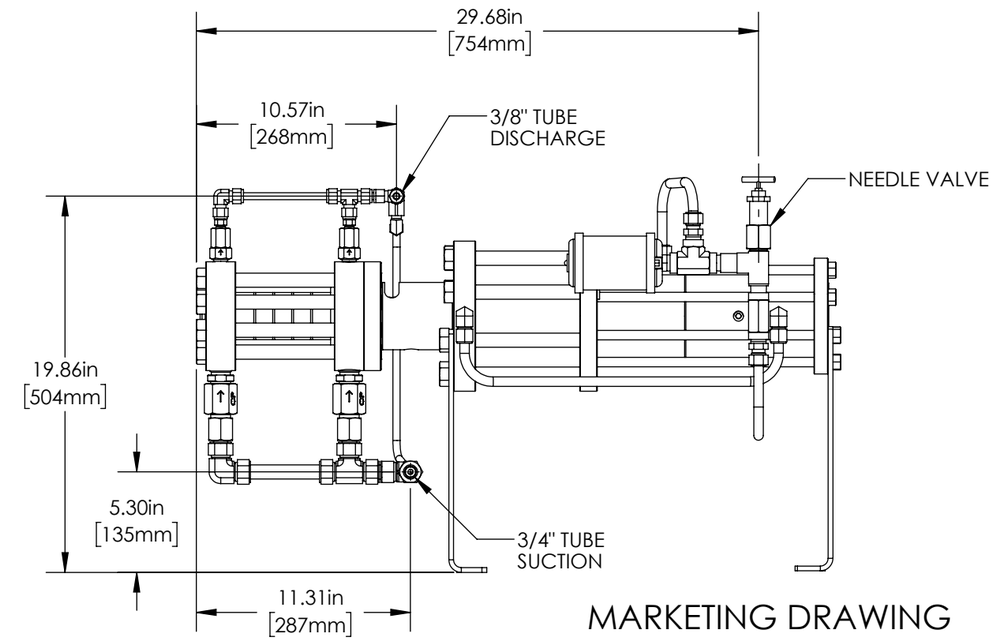

MARKETING DRAWING

WEIGHT	176.54 lb / 80 kg

PROPRIETARY AND CONFIDENTIAL
THE INFORMATION CONTAINED HEREIN IS PROPRIETARY TO CHECKPOINT SYSTEMS AND SHALL NOT BE REPRODUCED OR DISCLOSED IN WHOLE OR IN PART OR USED FOR ANY PUPOSE EXCEPT WHEN SUCH USER POSSESSES DIRECT WRITTEN AUTHORIZATION FROM CHECKPOINT SYSTEMS

CHECKPOINT PUMPS & SYSTEMS
21356 MARION LANE
MANDEVILLE, LA 70471 USA
TEL 504.340.0770 -- FAX 888.217.6402

CheckPoint
Pumps & Systems

DWG. TITLE
P5400 ASSEMBLY- 3/4"
TOP LEVEL ASSEMBLY

REV	DRAWING NUMBER	SIZE
001	P5412CNQ3	B
		SHEET 1 OF 2

P5412CNH3 - CERAMIC - HNBR

ITEM NO.	NUMBER	DESCRIPTION
1	P54MSA1	MOTOR SUB-ASSY
2	W54MN12CAQPN3Q6	P54 WET END ASSY

P5412CNQ3 - CERAMIC - FKM

ITEM NO.	NUMBER	DESCRIPTION
1	P54MSA1	MOTOR SUB-ASSY
2	W54MN12CAQPN3Q6	P54 WET END ASSY

P5412CNF3 - CERAMIC - FFKM

ITEM NO.	NUMBER	DESCRIPTION
1	P54MSA1	MOTOR SUB-ASSY
2	W54MN12CAQPN3Q6	P54 WET END ASSY

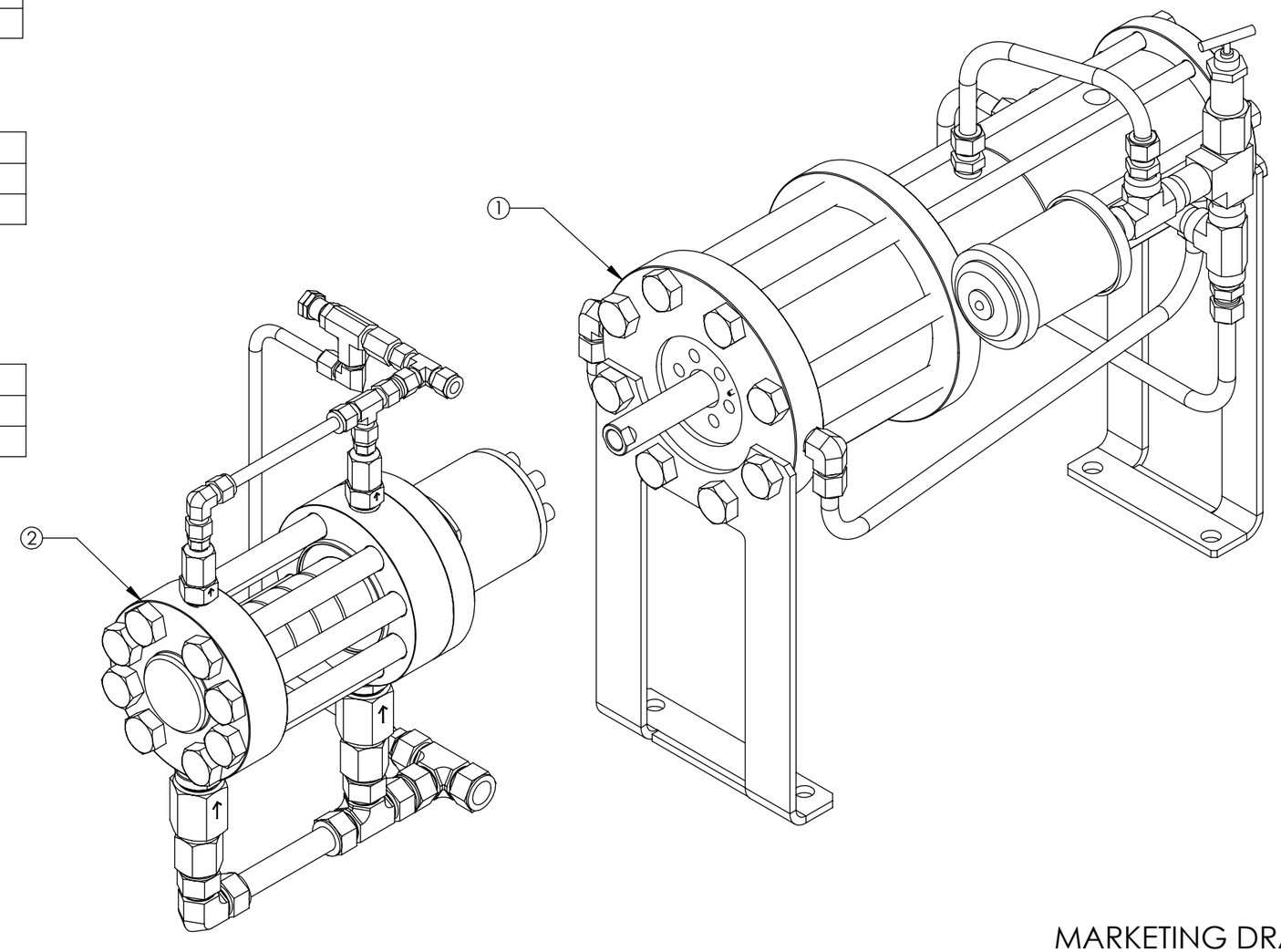

NOTE: SERIAL NUMBER PLATE / ATTACH SCREWS NOT SHOWN

MARKETING DRAWING

PROPRIETARY AND CONFIDENTIAL
THE INFORMATION CONTAINED HEREIN IS PROPRIETARY TO CHECKPOINT SYSTEMS AND SHALL NOT BE REPRODUCED OR DISCLOSED IN WHOLE OR IN PART OR USED FOR ANY PUPOSE EXCEPT WHEN SUCH USER POSSESSES DIRECT WRITTEN AUTHORIZATION FROM CHECKPOINT SYSTEMS

CHECKPOINT PUMPS & SYSTEMS
21356 MARION LANE
MANDEVILLE, LA 70471 USA
TEL 504.340.0770 -- FAX 888.217.6402

CheckPoint
Pumps & Systems

DWG. TITLE
P5400 ASSEMBLY- 3/4"
TOP LEVEL ASSEMBLY

REV	DRAWING NUMBER	SIZE
001	P5412CNQ3	B

SHEET 2 OF 2

DATE	APPROVED
MAR-07-25	JF

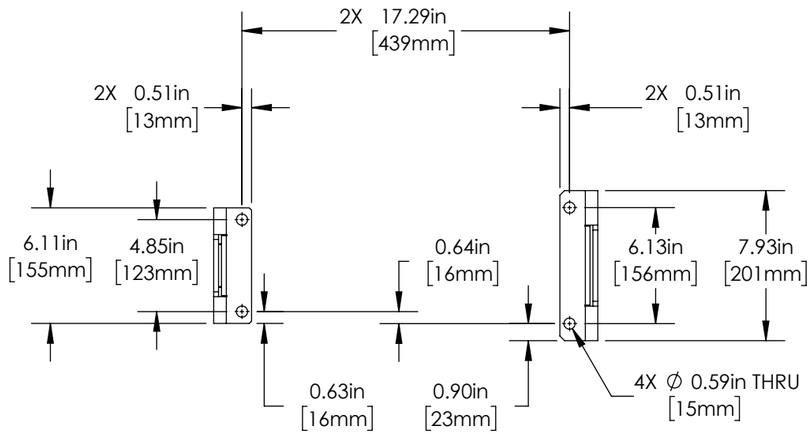

BOTTOM VIEW

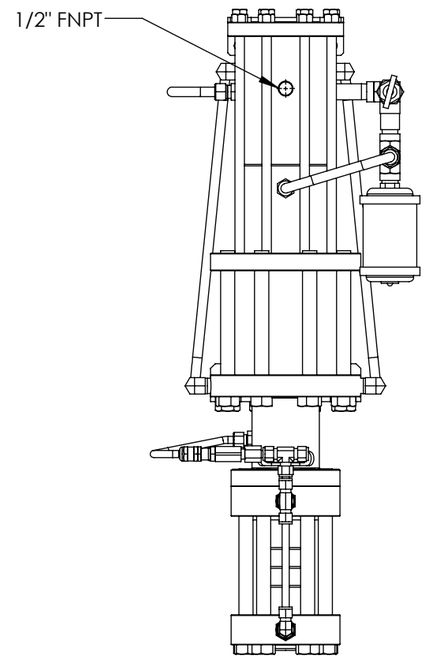

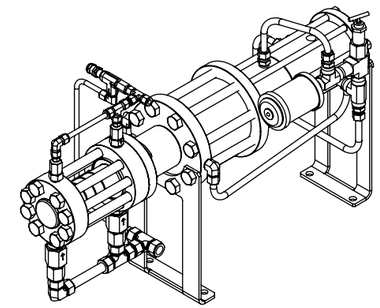

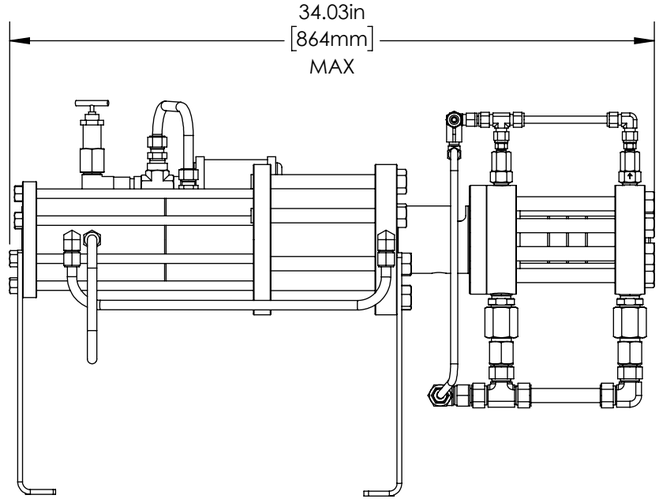

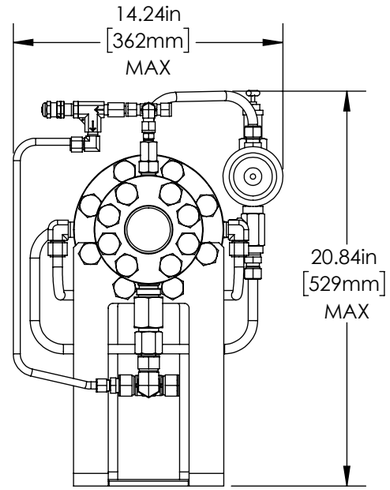

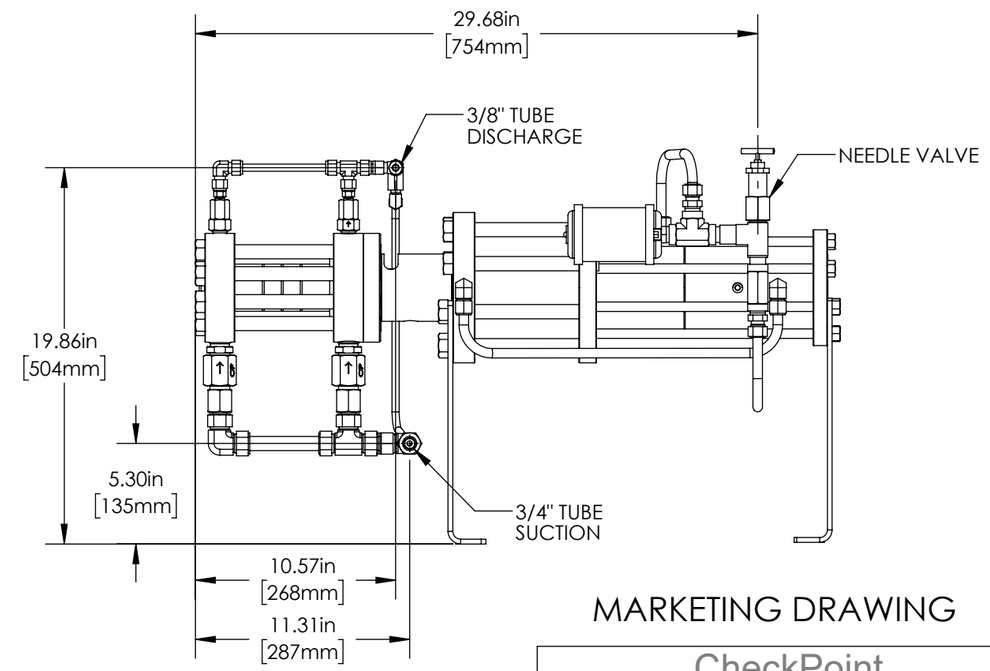

MARKETING DRAWING

WEIGHT	176.42 lb / 80 kg

PROPRIETARY AND CONFIDENTIAL

THE INFORMATION CONTAINED HEREIN IS PROPRIETARY TO CHECKPOINT SYSTEMS AND SHALL NOT BE REPRODUCED OR DISCLOSED IN WHOLE OR IN PART OR USED FOR ANY PUPOSE EXCEPT WHEN SUCH USER POSSESSES DIRECT WRITTEN AUTHORIZATION FROM CHECKPOINT SYSTEMS

CHECKPOINT PUMPS & SYSTEMS
21356 MARION LANE
MANDEVILLE, LA 70471 USA
TEL 504.340.0770 -- FAX 888.217.6402

CheckPoint
Pumps & Systems

DWG. TITLE
P5400 ASSEMBLY- 1"
TOP LEVEL ASSEMBLY

REV	DRAWING NUMBER	SIZE
001	P5416CNQ3	B
		SHEET 1 OF 2

P5416CNH3 - CERAMIC - HNBR

ITEM NO.	NUMBER	DESCRIPTION
1	P54MSA1	MOTOR SUB-ASSY
2	W54MN16CAHPN3H6	W54 WET END ASSY

P5416CNQ3 - CERAMIC - FKM

ITEM NO.	NUMBER	DESCRIPTION
1	P54MSA1	MOTOR SUB-ASSY
2	W54MN16CAQPN3Q6	W54 WET END ASSY

P5416CNF3 - CERAMIC - FFKM

ITEM NO.	NUMBER	DESCRIPTION
1	P54MSA1	MOTOR SUB-ASSY
2	W54MN16CAFPN3F6	W54 WET END ASSY

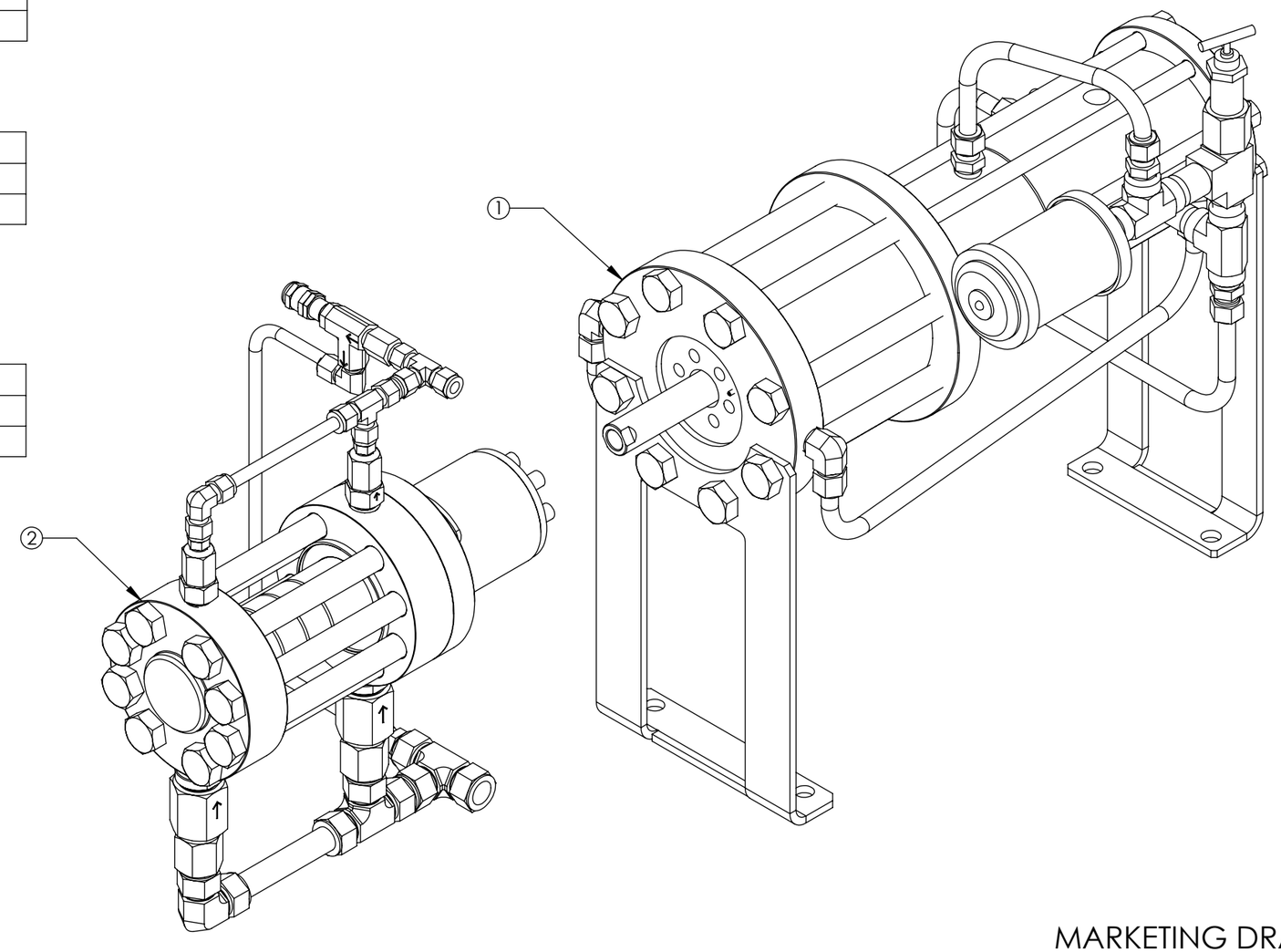

NOTE: SERIAL NUMBER PLATE / ATTACH SCREWS NOT SHOWN

MARKETING DRAWING

PROPRIETARY AND CONFIDENTIAL
THE INFORMATION CONTAINED HEREIN IS PROPRIETARY TO CHECKPOINT SYSTEMS AND SHALL NOT BE REPRODUCED OR DISCLOSED IN WHOLE OR IN PART OR USED FOR ANY PUPOSE EXCEPT WHEN SUCH USER POSSESSES DIRECT WRITTEN AUTHORIZATION FROM CHECKPOINT SYSTEMS

CHECKPOINT PUMPS & SYSTEMS
21356 MARION LANE
MANDEVILLE, LA 70471 USA
TEL 504.340.0770 -- FAX 888.217.6402

CheckPoint
Pumps & Systems

DWG. TITLE
P5400 ASSEMBLY- 1"
TOP LEVEL ASSEMBLY

REV	DRAWING NUMBER	SIZE
001	P5416CNQ3	B

SHEET 2 OF 2

DATE	APPROVED
MAR-07-25	JF

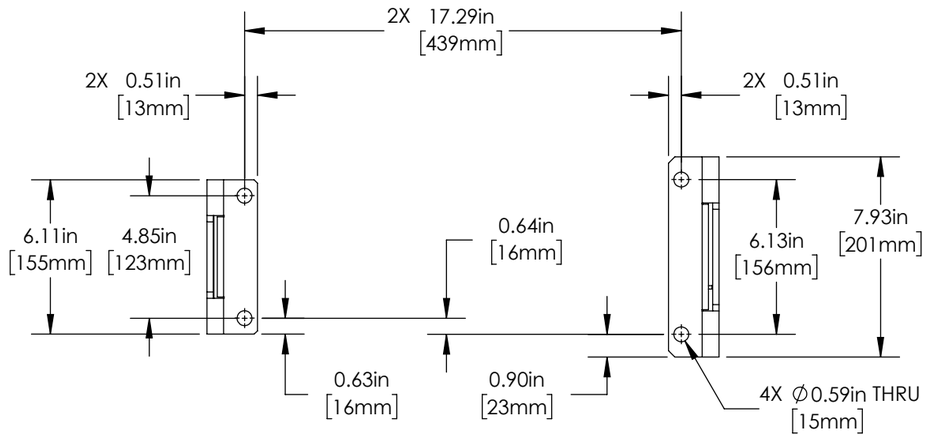

BOTTOM VIEW

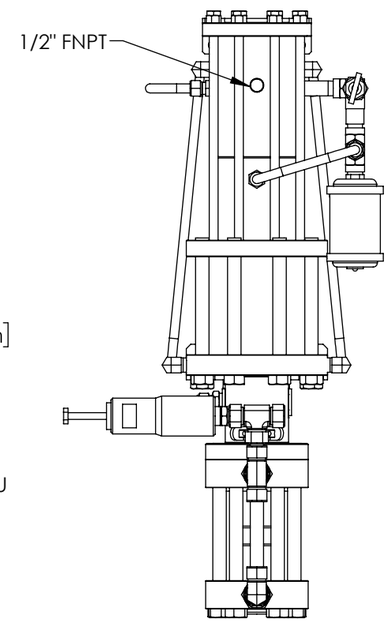

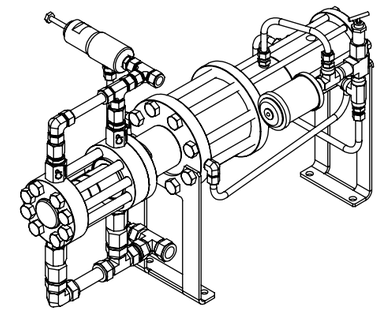

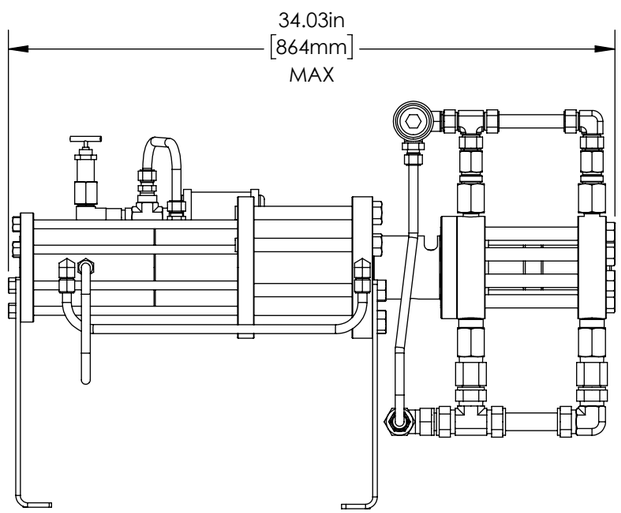

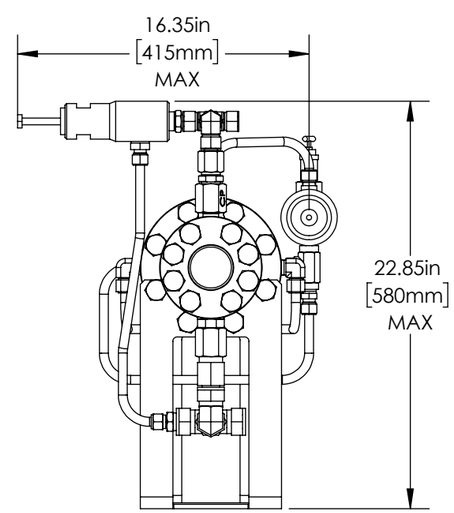

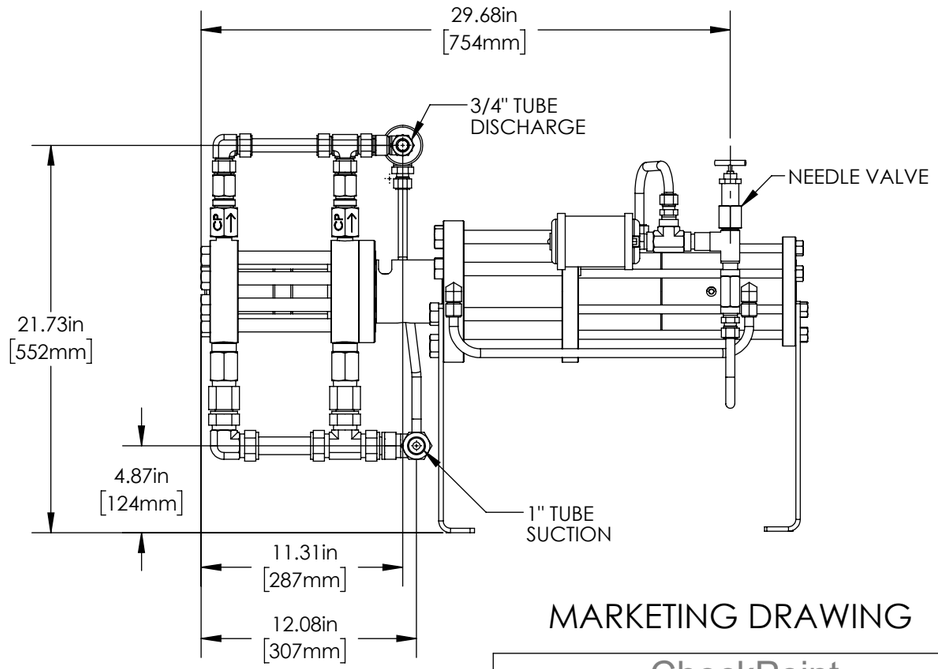

MARKETING DRAWING

WEIGHT	183 lb / 83 kg

PROPRIETARY AND CONFIDENTIAL

THE INFORMATION CONTAINED HEREIN IS PROPRIETARY TO CHECKPOINT SYSTEMS AND SHALL NOT BE REPRODUCED OR DISCLOSED IN WHOLE OR IN PART OR USED FOR ANY PUPOSE EXCEPT WHEN SUCH USER POSSESSES DIRECT WRITTEN AUTHORIZATION FROM CHECKPOINT SYSTEMS

CHECKPOINT PUMPS & SYSTEMS
21356 MARION LANE
MANDEVILLE, LA 70471 USA
TEL 504.340.0770 -- FAX 888.217.6402

CheckPoint
Pumps & Systems

DWG. TITLE
P5400 ASSEMBLY - 1-3/4"
TOP LEVEL ASSEMBLY

REV	DRAWING NUMBER	SIZE
004	P5428CNQ3	B

SHEET 1 OF 2

P5428CNH3 - CERAMIC - HNBR

ITEM NO.	NUMBER	DESCRIPTION
1	P54MSA1	MOTOR SUB-ASSY
2	W58MN28CAHPN3H6	W58 WET END ASSY

P5428CNQ3 - CERAMIC - FKM

ITEM NO.	NUMBER	DESCRIPTION
1	P54MSA1	MOTOR SUB-ASSY
2	W58MN28CAQPN3Q6	W58 WET END ASSY

P5428CNF3 - CERAMIC - FFKM

ITEM NO.	NUMBER	DESCRIPTION
1	P54MSA1	MOTOR SUB-ASSY
2	W58MN28CAFPN3F6	W58 WET END ASSY

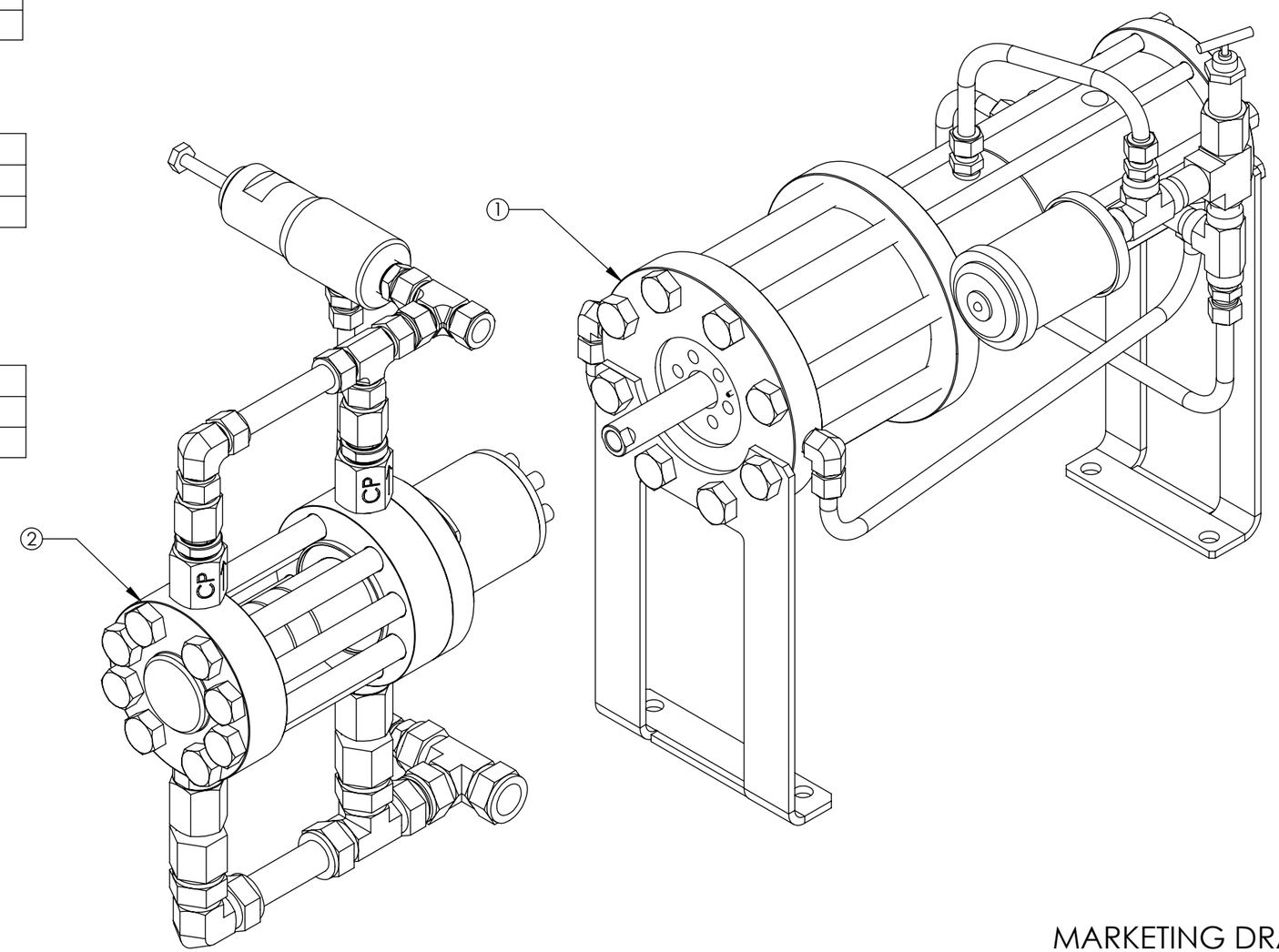

NOTE: SERIAL NUMBER PLATE / ATTACH SCREWS NOT SHOWN

MARKETING DRAWING

PROPRIETARY AND CONFIDENTIAL
THE INFORMATION CONTAINED HEREIN IS PROPRIETARY TO CHECKPOINT SYSTEMS AND SHALL NOT BE REPRODUCED OR DISCLOSED IN WHOLE OR IN PART OR USED FOR ANY PUPOSE EXCEPT WHEN SUCH USER POSSESSES DIRECT WRITTEN AUTHORIZATION FROM CHECKPOINT SYSTEMS

CHECKPOINT PUMPS & SYSTEMS
21356 MARION LANE
MANDEVILLE, LA 70471 USA
TEL 504.340.0770 -- FAX 888.217.6402

CheckPoint
Pumps & Systems

DWG. TITLE
P5400 ASSEMBLY - 1-3/4"
TOP LEVEL ASSEMBLY

REV	DRAWING NUMBER	SIZE
004	P5428CNQ3	B

SHEET 2 OF 2

DATE	APPROVED
MAR-07-25	JF

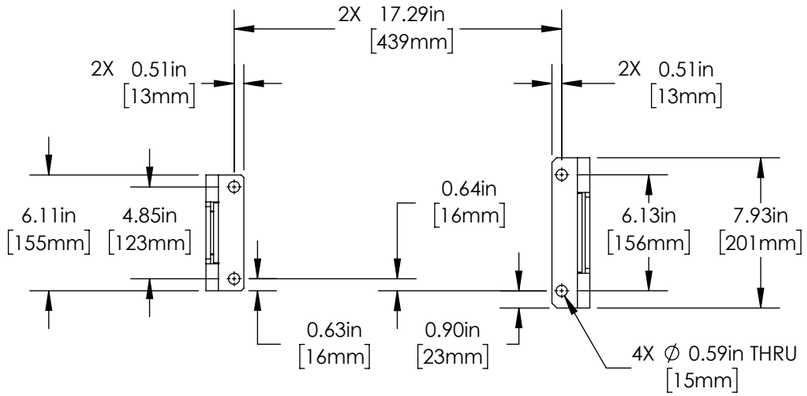

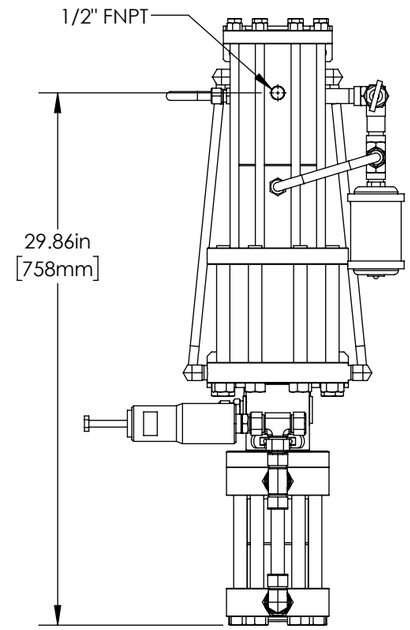

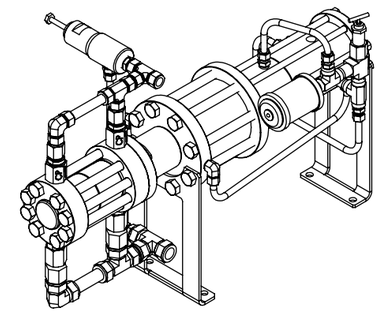

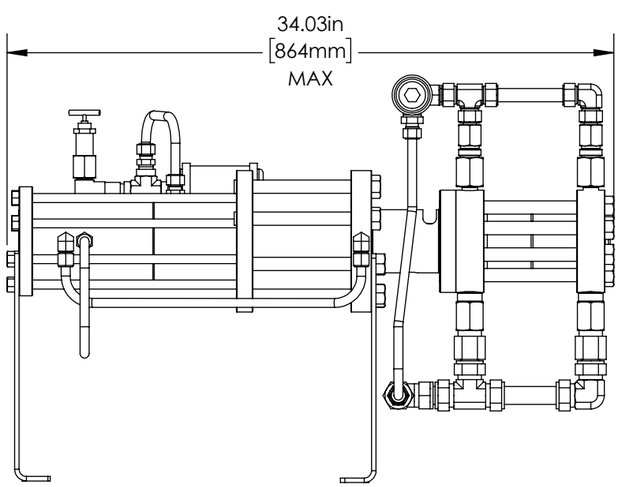

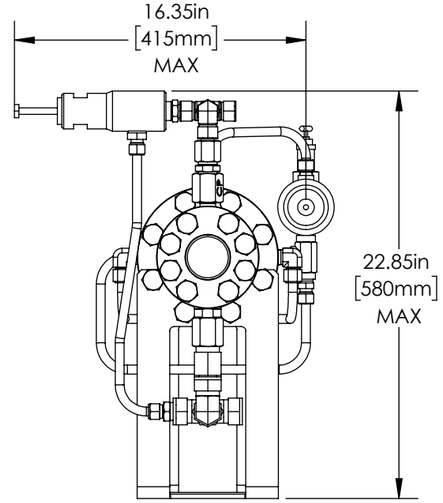

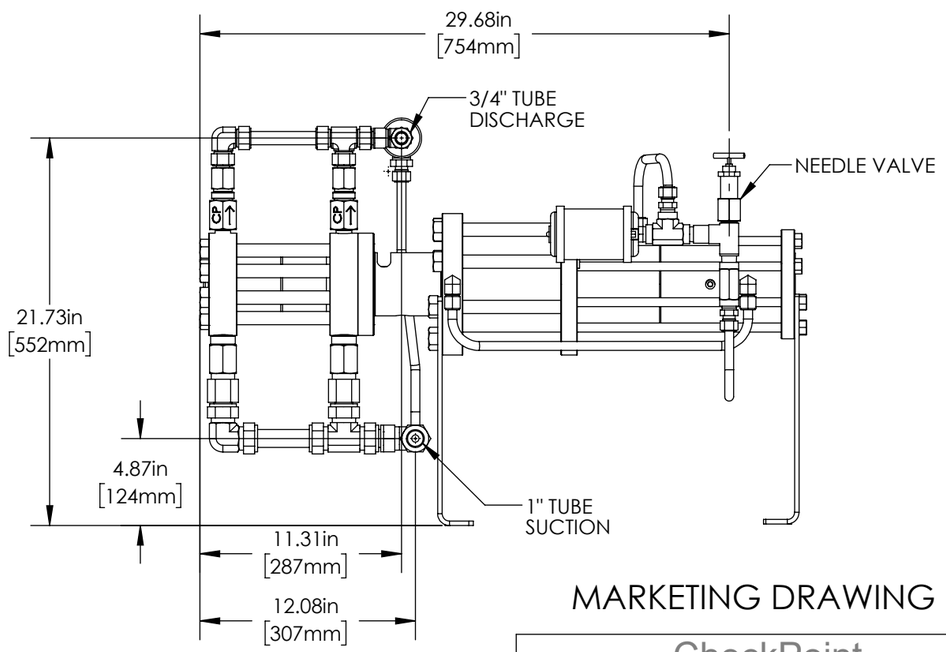

MARKETING DRAWING

WEIGHT	185 lb / 84 kg

PROPRIETARY AND CONFIDENTIAL

THE INFORMATION CONTAINED HEREIN IS PROPRIETARY TO CHECKPOINT SYSTEMS AND SHALL NOT BE REPRODUCED OR DISCLOSED IN WHOLE OR IN PART OR USED FOR ANY PUPOSE EXCEPT WHEN SUCH USER POSSESSES DIRECT WRITTEN AUTHORIZATION FROM CHECKPOINT SYSTEMS

CHECKPOINT PUMPS & SYSTEMS
21356 MARION LANE
MANDEVILLE, LA 70471 USA
TEL 504.340.0770 -- FAX 888.217.6402

CheckPoint
Pumps & Systems

DWG. TITLE
P5400 ASSEMBLY- 2-1/2"
TOP LEVEL ASSEMBLY

REV	DRAWING NUMBER	SIZE
005	P5440CNQ3	B

SHEET 1 OF 2

P5428CNH3 - CERAMIC - HNBR

ITEM NO.	NUMBER	DESCRIPTION
1	P54MSA1	MOTOR SUB-ASSY
2	W58MN40CAHPN3H6	W58 WET END ASSY

P5428CNQ3 - CERAMIC - FKM

ITEM NO.	NUMBER	DESCRIPTION
1	P54MSA1	MOTOR SUB-ASSY
2	W58MN40CAQPN3Q6	W58 WET END ASSY

P5428CNF3 - CERAMIC - FFKM

ITEM NO.	NUMBER	DESCRIPTION
1	P54MSA1	MOTOR SUB-ASSY
2	W58MN40CAFPN3F6	W58 WET END ASSY

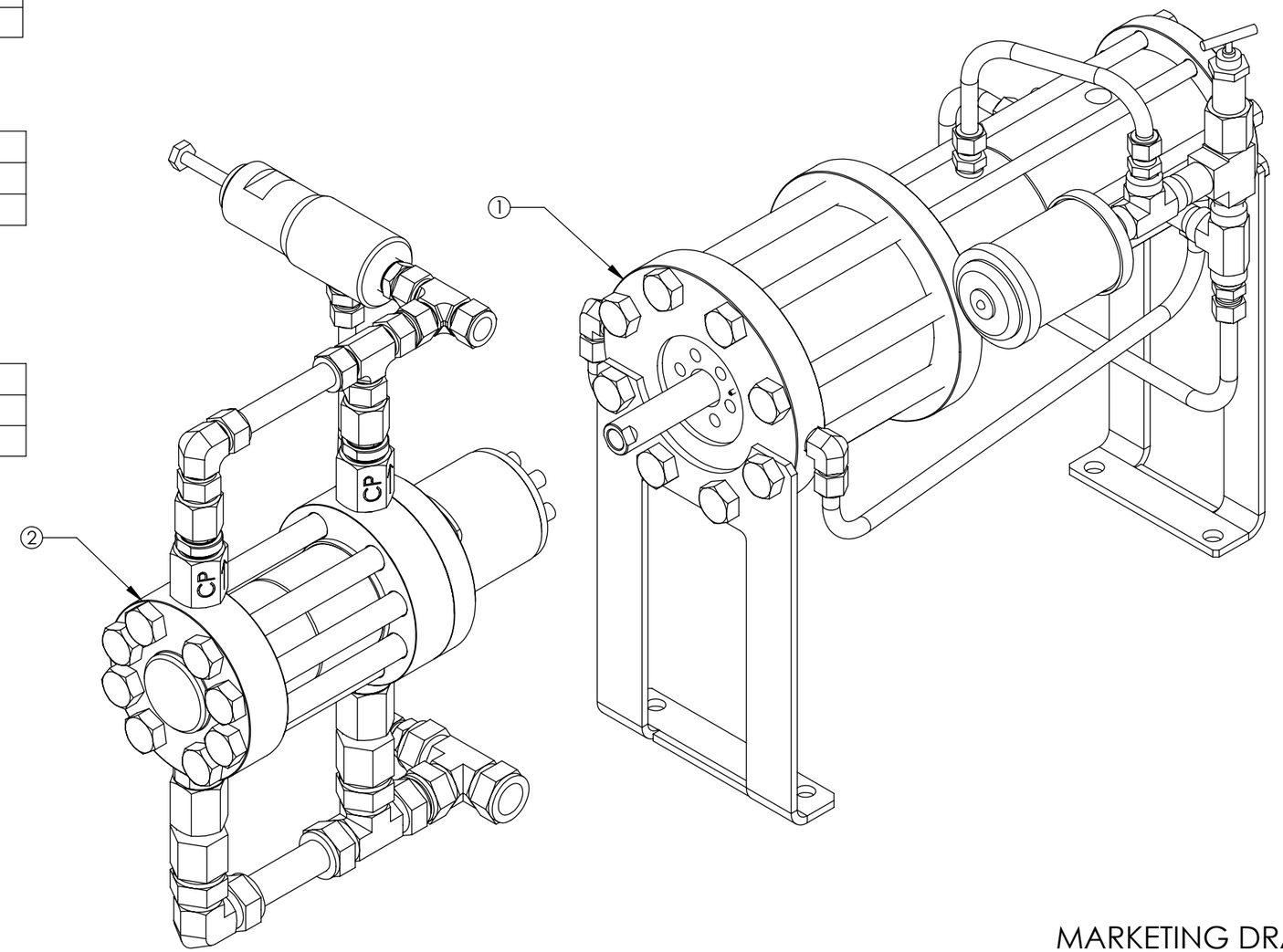

NOTE: SERIAL NUMBER PLATE / ATTACH SCREWS NOT SHOWN

MARKETING DRAWING

PROPRIETARY AND CONFIDENTIAL
THE INFORMATION CONTAINED HEREIN IS PROPRIETARY TO CHECKPOINT SYSTEMS AND SHALL NOT BE REPRODUCED OR DISCLOSED IN WHOLE OR IN PART OR USED FOR ANY PUPOSE EXCEPT WHEN SUCH USER POSSESSES DIRECT WRITTEN AUTHORIZATION FROM CHECKPOINT SYSTEMS

CHECKPOINT PUMPS & SYSTEMS
21356 MARION LANE
MANDEVILLE, LA 70471 USA
TEL 504.340.0770 -- FAX 888.217.6402

CheckPoint
Pumps & Systems

DWG. TITLE
P5400 ASSEMBLY- 2-1/2"
TOP LEVEL ASSEMBLY

REV	DRAWING NUMBER	SIZE
005	P5440CNQ3	B

SHEET 2 OF 2